MICROFUSION

THREE PHASE SCR POWER CONTROLLERS

FEATURES

Auto-Ranging Input Voltage
24 - 600 VAC, 45 - 65 Hz

MADE IN THE USA

AC Output
16, 32, 50, 80 Amps (@ 50°C 6000 ft)

Control Features
Microprocessor-based controller / phase lock loop timing
Firing modes: zero-cross / phase angle / Zero Cross Transformer (ZCT) Mode
Feedback: voltage, current, true power, external
Adjustable soft start
Output limits: voltage, current, power
Missing cycle detection
SYNC-GUARD™ and TRANS-GUARD™
Dedicated RUN/STOP bit

Analog Interface (Up to Two Analog Inputs)
Standard setpoint ranges: 0 - 5 Vdc, 4 - 20 mA
Field scalable 0 - 10 Vdc , 0 - 20 mA , or potentiometer

Available Fieldbus Interfaces

DeviceNet™	EtherNet/IP
EtherCat	Modbus RTU (RS-485)
PROFINET	Modbus TCP (Ethernet)

Easy Setup via Plug-n-Play USB
Load / save configurations
Diagnostics with chart and log operations

OEM Options (Consult Factory)
UL-listed. External panel mount or liquid- cooled heatsinks in single- and multizone configurations.
Line/load connections ring terminal option.

OPTIONS

General Purpose Input

Second Analog Input Channel
Second setpoint, potentiometer input, or external feedback
Pulse Width Modulation (PWM)

Alarm Relay
Form C relay output

2 x 16 Bit Analog Retransmits
Scalable 0/4 - 20 mA or 0 - 10 V

Current Limit, Power Limit, Voltage Limit

Remote Display
2-line, 16-character text display with five buttons

High Performance
True RMS power / load voltage feedback / load current feedback / high resolution control loop
Increased accuracy, linearity

Fusing
(See page 7)

CERTIFICATIONS (PENDING)

c UL us LISTED
CE EN60947-4
100kA SHORT CIRCUIT CURRENT RATING
FC Part 15 Subpart B Class A Device
RoHS COMPLIANT
Pb Pb-Free
ODVA

DESCRIPTION

MicroFUSION is an ultra-compact high-performance microprocessor-based power controller, available in single phase, three phase 4 SCR, or three phase 6 SCR models to control AC loads.

Resistive or transformer-connected loads can be controlled in either Phase Angle, Zero Cross, or Zero Cross Transformer (ZCT) Mode. Output is controlled linearly with respect to command signal and can be set to the average or RMS value of the voltage and current, as well as true instantaneous power or external feedback.

MicroFUSION Series power controllers are available in current ratings from 16, 32, 50, 80 amps AC. Auto-ranging voltage circuitry enables main supply voltage from 24-600 VAC, (45-65 Hz) eliminating the need for hardware jumpers or stocking multiple controllers for international voltages. A separate 24 Vdc power source supplies the control electronics and maintains critical communications to your control system when the mains are absent.

Status LEDs and an LED bar graph make operation and troubleshooting simple. A plug-n-play USB interface and free FUSION Control Panel software for the PC further simplifies installing and configuring the controller to your application. For example, controller settings can be duplicated simply by loading a configuration file saved from a previous unit.

Setpoints can be controlled through the standard analog or optional digital fieldbus interface. The factory-configured analog setpoint signal ranges are 0 - 5 Vdc and 4 - 20 mA, both of which are field scalable from 0 - 10 Vdc or 0 - 20 mA.

The fieldbus interface options include DeviceNet™, EtherNet/IP, EtherCAT, PROFINET, Modbus RTU (RS-485), or Modbus TCP. These can be used to communicate with a PLC or factory control system.

PROFINET, Modbus TCP, and EtherNet/IP are available as internal fieldbus options. All interfaces are available through an external module. Furthermore, a single external network module can control up to ten zones, reducing system installation costs.

The robust design of MicroFUSION allows for continuous full-frame current operation - without derating - at up to 50° C / 6000 ft altitude. Cooling is accomplished through either natural convection, forced air, optional external panel mount, or optional liquid-cooled chill plate.

The optional remote display provides clear readouts of key electrical parameters and alarm status. Set-points, limits and alarms are touchpad accessible and easily customized. For additional convenience, a panel mounting kit is also provided, eliminating the need for costly external meters / indicators / switches and the associated costs of wiring and labor.

 © Control Concepts Inc., 2014

DIMENSIONS

DIN Rail / Panel Mount

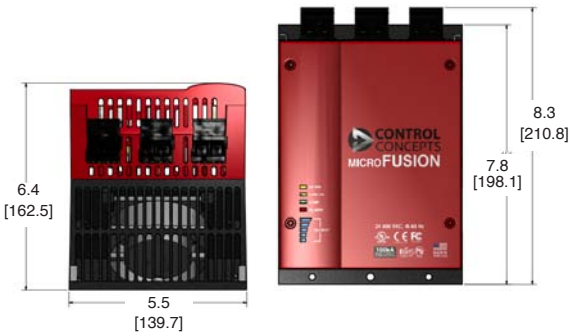

Liquid-Cooled

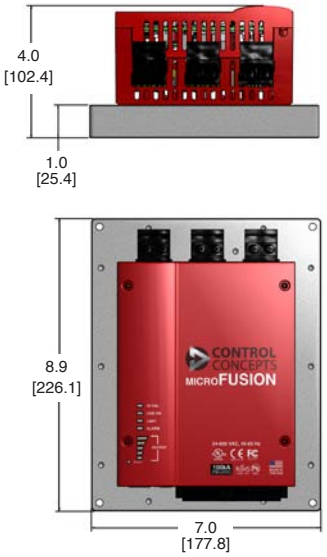

External Mount

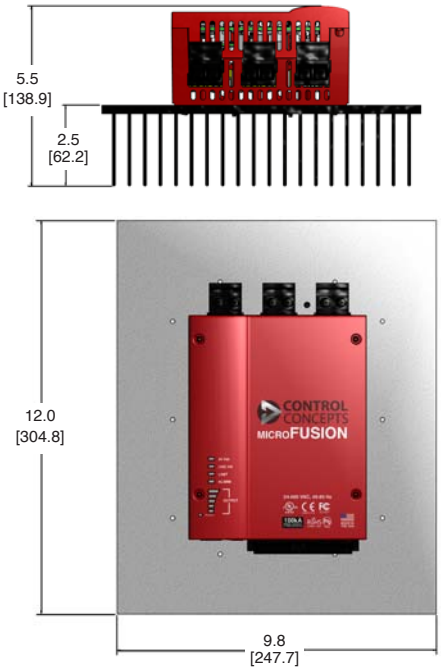

Dimensions: Inches [mm]

P1/P2 CONNECTOR

P1 Connector

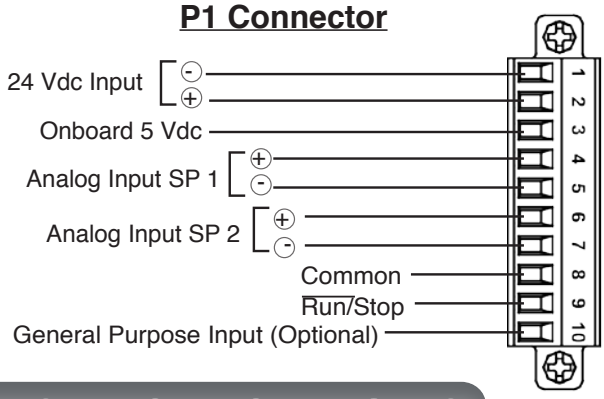

P2 Connector

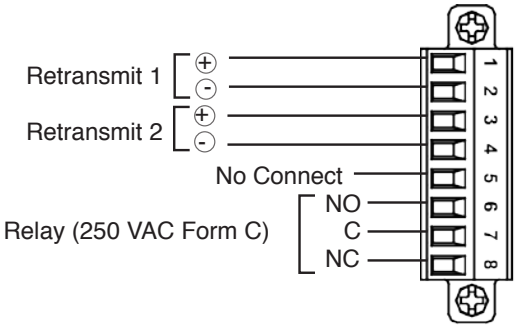

SPECIFICATIONS

POWER	
Line Voltage (Auto Ranging)	24 - 600 Vac (Nominal) +10% / -15% (Contact factory for other options)
Line Frequency (Auto Ranging)	45 - 65 Hz
Frame Current Ratings (Amps)	I Continuous RMS (AC) 16 I 32 I 50 I 80
Current Rating- Peak Surge	20X continuous rating
Minimum Hold/Latch Current	500 mA
SCR Rating (PIV)	1600 V peak forward & reverse
Fusing	Optional external Class T, branch-rated, touch-safe fusing
Thermal	Integrated heat sink thermal sensor
Current Limit	20% – 105% of continuous rating of Frame Amp Rating
Current Trip	50% - 450% of continuous rating
Power Dissipation	1.3 Watt per amp of load current per phase
Control Power / Operates Internal Control Electronics	24 Vdc +10 / -15%

PERFORMANCE

	Standard	High Performance Option
Setpoint Resolution	10k	10k or 64k
Internal Control Loop Resolution	16k	64k
Output Resolution	12k @ 50Hz, 10k @ 60Hz	50k @ 50Hz, 42k @ 60Hz
Accuracy (Full Conduction)		
Voltage	2% of span	0.5% of span
Current	2% of span	0.5% of span
Power	2% of span	1% of span
Output Linearity	3% from 5 to 100% output range	1% from 5 to 100% output range
Accuracy	A +10% to -15% line voltage change will result in a max output change of 0.5% from 5 to 100% output range	A +10% to -15% line voltage change will result in a max output change of 0.05% from 5 to 100% output range
Temperature Drift	Output shall not change greater than 0.5% per degree C max over the operating temperature range from 5 to 100% output range	Output shall not change greater than 0.2% per degree C max over the operating temperature range from 5 to 100% output range

ANALOG SETPOINT INPUTS

Voltage	0 - 10V	0 to 65535	Update rate: 166.67 Hz every 6 ms
Current	0 - 20 mA	0 to 32767	
Pulse Width Modulation	0 - 100%	Frequency range: 20 Hz to 2KHz or up to 2KHz max	

ENVIRONMENTAL

Surrounding Air Operating Temperature	32°F [0°C] - 122°F [50°C] with derating for 60°C
External Panel Mount	122°F [50°C] with no derating
Liquid-Cooled	140°F [60°C] with no derating
Humidity	20% to 90% RH Non-Condensing
Rated Operating Altitude	Up to 6000 ft [1750m] at full rated current
Contaminates	ROHS Compliant, CE Pollution Degree 2
Storage Temperature	- 4 to 176°F [- 20 to 80°C]

DC POWER CONSUMPTION

Fan Cooled	24 Watts
External Panel Mount	18 Watts
Liquid Cooled	18 Watts

ENCLOSURE PROTECTIVE RATING (PENDING)

International	IP 20
Remote Display	IP 65, UL Type 1 & 12
External Panel Mount	IP 65, UL Type 4
Liquid Cooled	IP 65, UL Type 4

RELIABILITY

Mean Time Between Failure (MTBF)	Designed for 50,000 Hours

ISOLATION

Signal to Line/Load	3750 Vac minimum
Line/Load to Ground	2500 Vac minimum
Signal to Ground	1500 Vac minimum
Line to Load	1400 Vac minimum
Network	1500 Vac minimum
USB	2500 Vac minimum
Signal to Processor	1500 Vac minimum
Remote Display	2500 Vac minimum

 © Control Concepts Inc., 2014

FEATURE COMPARISON

MicroFUSION is available with one of two circuit boards. SX is a lower-cost alternative, whereas HX features CCI Link™ and is a fully populated board that can be field-upgraded to include retransmits and other features.

● = Included O = Field Upgradable Option
☐ = Option Available at Manufacturing Time - = Not available

FEATURE LIST	SX	HX
24-600 VAC Auto-Ranging Input	●	●
Phase Angle and Zero Cross Firing Modes	●	●
LED Bar Graph	●	●
Touchsafe Design	●	●
UL-Listed, CE, 100kA SCCR, and RoHS certifications	●	●
Micro USB Connection (USB Plug-N-Play)	●	●
Free Control Panel Software	●	●
DIN Rail Mountable	●	●
Panel Mount	●	●
$\overline{\text{RUN}}$/STOP	●	●
Overcurrent Trip	●	●
Analog Input (0-10V, 0/4-20 mA or potentiometer)	●	●
CCI Link™ Connectivity	●	●
Fixed Current Limit - 105% of Frame	●	-
Adjustable Current Limit	O	●
Alarm Relay	O	●
Current Control	O	●
Monitor Current	O	O
Analog Channel 2 Input	O	O
General Purpose Input	O	O
Pulse Width Modulation Input	O	O
Accessory Option: Remote Display	O	O
Digital Fieldbus Options: DeviceNet, Modbus TCP, Modubs RTU, EtherNet/IP, PROFINET, EtherCat	O	O
SYNC-GUARD™ Connectivity	O	O
External Panel Mount Heatsink	☐	☐
Water-Cooled Heatsink	☐	☐
Zero Cross Transformer Firing Mode	-	O
Retransmit (RTX): 2x High Resolution Analog Retransmits 0-10 VDC or 0/4-20 mA	-	O
Voltage Limit	-	O
Power Limit	-	O
Load Voltage Control	-	O
True Power Control	-	O
Monitor True RMS Power	-	O
High Resolution Control Loop	-	O

MODEL NUMBERS

uF3□□□□□□□-□□-□□□□□-□□□□

Board Type
- SX = Standard
- HX = Upgradable High Performance

Load Configuration
- 4DY = Three Phase 4 SCR (2 Leg)
- 6DY = Three Phase Delta/Wye, 6 SCR
- 64Y = Three Phase 4 Wire Wye, 6 SCR
- 6ID = Three Phase Inside Delta, 6 SCR

Frame
- A = 16 - 32A (Panel Mount / Din Rail)
- B = 50 - 80A (Panel Mount / Din Rail)
- C = 16 - 32A (External Mount)
- D = 50 (External Mount)
- E = 16 - 32A (Liquid Cooled)
- F = 50 - 80A (Liquid Cooled)

Option Board
- 0 = None
- E = Modbus TCP
- I = EtherNet/IP
- N = PROFINET

Amp Size
- 16 = 16 Amps
- 50 = 50 Amps
- 32 = 32 Amps
- 80 = 80 Amps [1]

Performance

Available with SX:
- S = Standard
- L = Adjustable Current Limit and current feedback

Available with HX:
- L = Adjustable Current Limit and current feedback
- P = High Performace (Includes Load Voltage Feedback, Power Control, Current Limit, Power Limit, High Resolution Control Loop)

I/O
- 0 = None (Only applicable for SX; HX board is equipped with an alarm relay by default)
- 1 = Alarm Relay (1x Form C)
- 2 = General Purpose Input / Analog Input Channel 2 / Pulse Width Modulation Input
- 3 = Both

Retransmits
- 0 = None
- R = Retransmits [2] (Two 16-bit analog retransmits for voltage, current, or power)

Sync
- 0 = None
- S = Digital SYNC-GUARD™

Zero Cross Transformer Mode
- Z = Zero Cross Transformer Mode [2]

Branch Rated Class T Fuse Options

Blank = None

F010 = 10A	F035 = 35A	F070 = 70A
F015 = 15A	F040 = 40A	F080 = 80A
F020 = 20A	F045 = 45A	F090 = 90A
F025 = 25A	F050 = 50A	F100 =100A
F030 = 30A	F060 = 60A	See “Fusing Options,” page 7, for more information.

[1] 80 Amps not available for external panel mount

[2] Only available with HX type board

 © Control Concepts Inc., 2014

FUSING OPTIONS

All touchsafe kits have 600 VAC, Branch-Rated, Class T Fusing

Three Phase controllers require 3 Pole Fuseblocks.

TOUCHSAFE KITS: THREE PHASE

MODEL NUMBER	CCI PART NUMBER	AMP SIZE	DESCRIPTION
F010	SFKTS63T10	10	3 Pole Assy - 3 x Fuse, 1 x Block, 3 x Cover
F015	SFKTS63T15	15	3 Pole Assy - 3 x Fuse, 1 x Block, 3 x Cover
F020	SFKTS63T20	20	3 Pole Assy - 3 x Fuse, 1 x Block, 3 x Cover
F025	SFKTS63T25	25	3 Pole Assy - 3 x Fuse, 1 x Block, 3 x Cover
F030	SFKTS63T30	30	3 Pole Assy - 3 x Fuse, 1 x Block, 3 x Cover
F035	SFKTS63T35	35	3 Pole Assy - 3 x Fuse, 1 x Block, 3 x Cover
F040	SFKTS63T40	40	3 Pole Assy - 3 x Fuse, 1 x Block, 3 x Cover
F045	SFKTS63T45	45	3 Pole Assy - 3 x Fuse, 1 x Block, 3 x Cover
F050	SFKTS63T50	50	3 Pole Assy - 3 x Fuse, 1 x Block, 3 x Cover
F060	SFKTS63T60	60	3 Pole Assy - 3 x Fuse, 1 x Block, 3 x Cover
F070	SFKTS63T70	70	3 Pole Assy - 3 x Fuse, 1 x Block, 3 x Cover
F080	SFKTS63T80	80	3 Pole Assy - 3 x Fuse, 1 x Block, 3 x Cover
F090	SFKTS63T90	90	3 Pole Assy - 3 x Fuse, 1 x Block, 3 x Cover
F100	SFKTS63T100	100	3 Pole Assy - 3 x Fuse, 1 x Block, 3 x Cover

ACCESSORIES

CCI LINK™

MicroFUSION features CCI Link™ (Figure 1), a proprietary deterministic digital bus that enables multiple Control Concepts devices to communicate with each other. CCI Link™ is currently used to enable SYNCGUARD™ over a digital bus. The ability to daisy-chain multiple MicroFUSION units will be released soon.

Available cable lengths: 6 inch, 1', 5', 10', 15'.

Figure 1

FIELDBUS INTERFACE

Modbus RTU (RS-485), Modbus TCP (Ethernet), DeviceNet, EtherNet/IP, EtherCAT, or PROFINET. Simplify your cabling, eliminate A/D conversion error, and gain access to monitor information.

Internal interface option: Modbus TCP, EtherNet/IP, PROFINET
External interface option: All fieldbus interfaces are available. Controls up to ten zones.

REMOTE DISPLAY

Easily view and customize limits, set-points, and alarm conditions
2-Line, 16-character text display (Figure 2)
UL-type 1 & 12 ratings, IP65

DIN RAIL POWER SUPPLIES

24 VDC DIN Rail Power Supply: 24, 60, or 100 Watts

USB CABLE

15 ft [4.92m] Micro USB cable

OTHER ACCESSORIES

Please contact us for fuse sizing and other accessory needs and we would be happy to accommodate you.

CONTACT/ORDERING INFORMATION

TEL: (952) 474-6200 I (800) 765-2799
FAX: (952) 474-6070 I www.ccipower.com
18760 Lake Drive East, Chanhassen, MN 55317, USA

CONTROL CONCEPTS

 © Control Concepts Inc., 2014