CONTROL CONCEPTS

Visit our website to download the latest Control Panel Software and User Manuals at:

CCIPOWER.COM/CUSTOMER-SUPPORT

MicroFUSION SEMI

40 & 50 Amp Power Controller

QUICK INSTALL GUIDE

WARNING: Ensure all high voltage is off and disconnected before wiring the controller. Always wire in accordance with local codes.

OPERATING SEQUENCE

1. Install the controller with appropriate clearance as shown in the *Panel Layout* section.
2. Wire and attach external connectors as shown in the *Connectors* section.
3. Wire Line and Load connections as shown on the *Wiring Diagram* section.
4. Wire 24VDC and RUN/STOP pin to connector P1 as shown in *Connectors* section.
5. Apply 24VDC power and set desired parameters using the Control Panel Software.
6. Apply Line Voltage.
7. Place controller in RUN mode using the Control Panel Application.
8. Check controller LEDs for proper operation as shown in the *Indicator Status* section.
9. Apply a setpoint command using Control Panel to adjust controller output.

CONTACT / ORDERING INFORMATION

TEL: (952) 474 - 6200 | (800) 765 - 2799
FAX: (952) 474 - 6070 | www.ccipower.com

8077 Century Blvd, Chanhassen, MN 55317, USA

CONTROL CONCEPTS

PANEL LAYOUT

Mount controllers vertically*

Cross-hatched areas designate clearances for proper air circulation and cooling. The top and bottom of the controller must have a minimum of 3.0” [76.2mm] free of obstruction as measured from the edge of the heatsink fins.
Controllers can be mounted side-by-side without need of additional clearances.

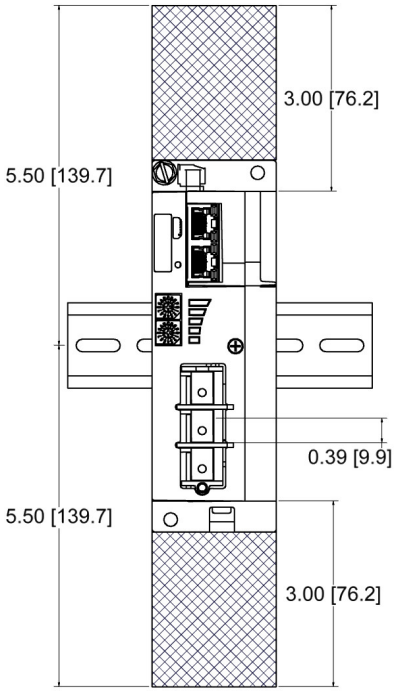

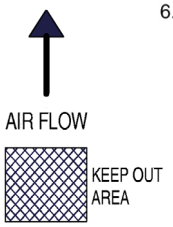

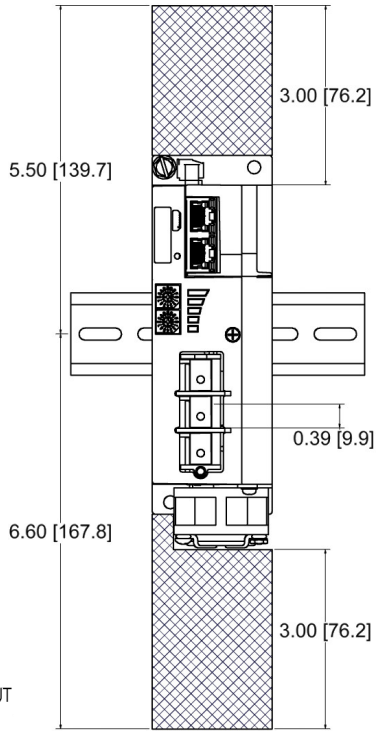

Dimensions: Inches [mm]

* Mounting hardware not included

When installing without DIN rail, use #10 or M5 screws with star washers.

Do not install feet if using DIN rail

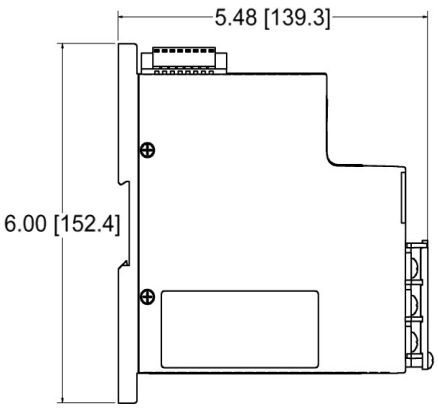

WIRING DIAGRAM

For line and load connections, use copper conductors rated 75° C minimum.

A Ground wire is recommended for proper operation.

0.60 mA at 480 VAC maximum through B1 connection.

14 AWG minimum wire size for A1 and A2 terminal connectors. Use #8 ring terminals.

Wire controller to conform with the National Electric Code (NEC) and/or all local wiring codes.

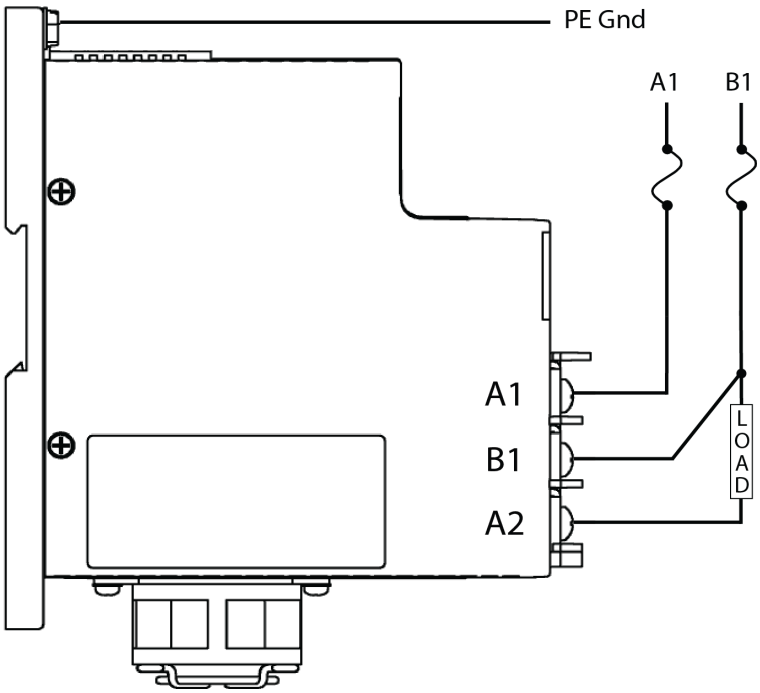

 © Control Concepts Inc. 2023

CONNECTORS

Tightening Torque - P1 Connector		
# of Wires	Wire Size (AWG)	Torque
1	16 - 26	3.0 Inch lbs [0.34 Nm]
2	20	3.0 Inch lbs [0.34 Nm]

Tightening Torque - Line/Load Screws	
Ring Terminal Size	Torque
#8 or M4	17 Inch lbs [1.92 Nm]

P1 8-pin connector

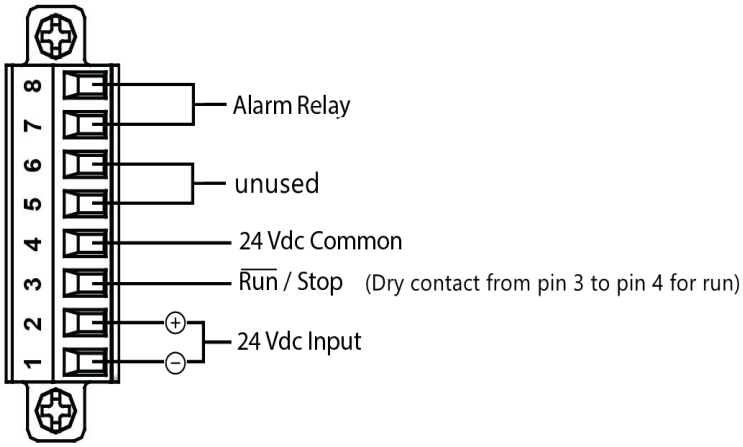

INDICATOR STATUS

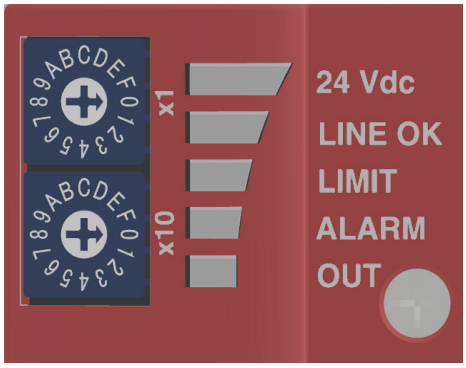

24 Vdc	
Green	+24 Vdc OK
Red	+24 Vdc wired backwards

LINE OK	
Off	AC Line is OFF
Green	AC Line ON, has phase lock
Orange	AC Line ON, attempting to obtain phase lock
Red	AC Line ON, no phase lock or phase loss
Alternating Red/Green	Flash Programming download in progress

LIMIT	
Off	OK, No Limits
Orange	Voltage Limit reached
Red	Current Limit reached
Alternating Red/Green	Power Limit reached

ALARM	
Off	OK, No Alarms
Orange	Warning Alarm, Controller in “Run” mode
Red *	Fault, Inhibit Alarm is active
Red also indicates “in bootloader” on power-up/reset initialization	

OUT	
Off	NOT in RUN mode
Green	In RUN with 0% < output < 100%
Red	In RUN at 100% output
Orange	In RUN with No output (zero setpoint/command)

ETHERCAT INTERFACE

EtherCAT Ports

OUT

IN

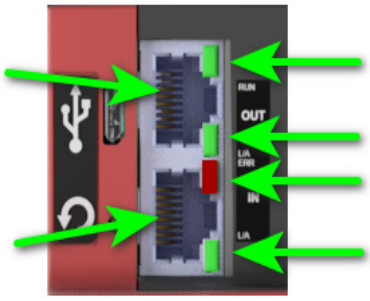

Port Indicators

RUN

LINK/ACTIVITY

ERROR

LINK/ACTIVITY

Refer to the EtherCAT Indicator and Labeling specification document ETG.1300 for expected port indicator operation.

EtherCAT Address ID switches

Set hex switches to the desired ID and reset controller to apply the setting.
The current address is shown in the Network window in the Control Panel software Communication tab.

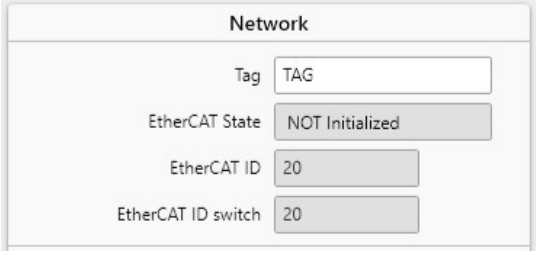

TROUBLESHOOTING

If you purchased your controller from an OEM Supplier, contact the supplier for additional assistance in the event your question may call for information or components not available to our factory.

- Verify operation of the controller by referencing the LED indicators *see Indicator Status* section.
- Inspect all wiring and connections. Ensure a steady 24Vdc power source is attached to the controller.
- Repeat the *Operating Sequence* steps outlined on the first page of this document.
- Connect with the MicroFUSION Control Panel software to view real-time data, faults, and alarms. The Control Panel Diagnostic tab provides additional fault and history information.
- If unable to connect with the Control Panel Software with a "*No Control Concepts devices are available*" message; re-check the USB cable connections.
  Common communication issues have been found to be caused by poor quality generic USB cables.

Sales and Technical Support is available Monday to Friday 8:00 AM to 5:00 PM US Central Time
Contact us directly using Live Chat or email on our website at **www.ccipower.com**
or by calling 1-(800)-765-2799 or 1-(952)-345-6228

c UL us LISTED

CE EN60947-4

100kA SHORT CIRCUIT CURRENT RATING

FC Part 15 Subpart B Class A Device

RoHS COMPLIANT

Pb Pb-Free

PROUDLY DESIGNED & ASSEMBLED IN THE USA

CE certification pending

 © Control Concepts Inc. 2023