CONTROL CONCEPTS

Visit our website to download the latest Control Panel Software and User Manuals at:

CCIPOWER.COM/CUSTOMER-SUPPORT

MicroFUSION Power Controller

3 Phase Inside Delta

8 - 80 Amps

QUICK INSTALL GUIDE

OPERATING SEQUENCE

1. Install the controller in the desired location with appropriate clearance as shown in the *Panel Layout*.
2. Wire and attach external connectors as shown in the *Connectors* section.
3. Wire Line and Load connections as shown on the *Wiring Diagram*.
4. Apply 24 Vdc power to the P1 connector pins 1 and 2 to initiate controller startup.
5. Place controller in RUN mode using either the Control Panel Application or manually wire the RUN/STOP pin on connector P1 as shown in *Connectors* section.
6. Check controller LEDs for proper operation as shown in the *Indicator Status* section.
7. Apply a command signal or control panel setpoint command to adjust controller output.

WARNING: Ensure all high voltage is off and disconnected before wiring the controller. Always wire in accordance with local codes.

If alarm LED's are present, check controller connections and settings, refer to the *Troubleshooting* section. When using the control panel application, the Diagnostics and Alarm tabs displays warning and fault status.

This guide provides minimal troubleshooting procedures. Consult the MicroFUSION User's Manual, the Control Concepts Control Panel Manual, or contact Control Concepts support for additional information.

If ordered with optional communications board, refer to the MicroFUSION User's manual for additional instructions. Download the latest Control Panel and Microcontroller manuals at ***ccipower.com***

CONTACT / ORDERING INFORMATION

TEL: (952) 474 - 6200 | (800) 765 - 2799
FAX: (952) 474 - 6070 | www.ccipower.com

8077 Century Blvd, Chanhassen, MN 55317, USA

CONTROL CONCEPTS

PANEL LAYOUT

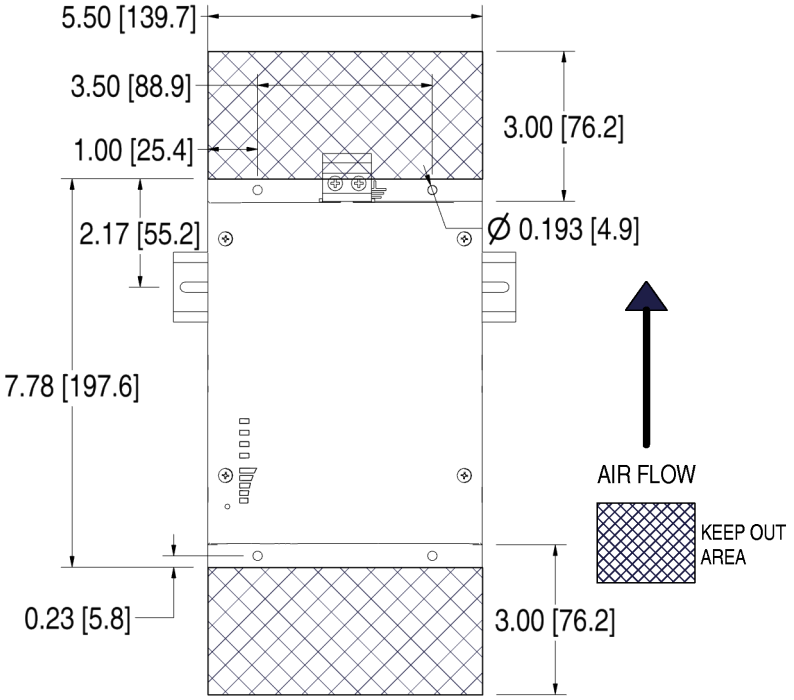

Dimensions: Inches [mm]

Mount controllers vertically*.

Cross-hatched areas designate clearances for proper air circulation and cooling.

The top and bottom of the controller must have a minimum of 3.0” [76.2mm] free of obstruction as measured from the edge of the heatsink fins.

* Mounting hardware not included

Install using #10 or M5 screws with star washers.

WIRING DIAGRAM

For line and load connections, use copper conductors rated 75° C minimum.

A Ground wire is recommended for proper operation. Use 10 AWG or larger wire.

See the ***Connectors*** section for wiring and torque specifications.

Consult the MicroFUSION User’s manual for additional wiring and mounting information.

Wire controller to conform with the National Electric Code (NEC) and/or all local wiring codes.

14 AWG minimum wire size for line and load connectors.

Only 1 conductor allowed per terminal

Inside Delta Wiring Diagram

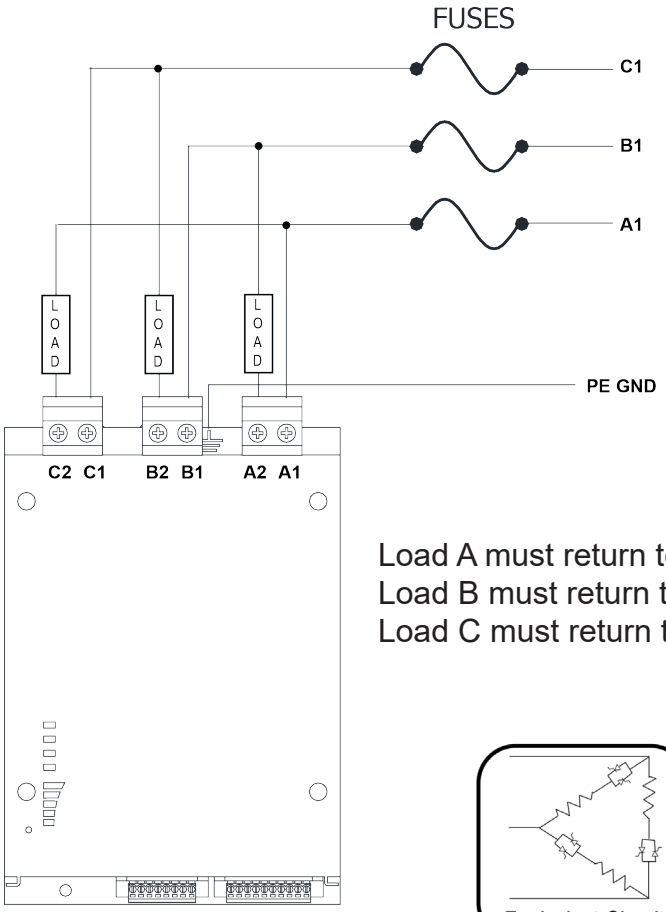

Load A must return to Line B
Load B must return to Line C
Load C must return to Line A

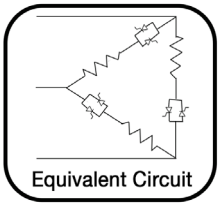

 © Control Concepts Inc. 2021

CONTROL PANEL

Download and install the latest Control Panel Software at:
https://ccipower.com/products/accessories/control-panel-software

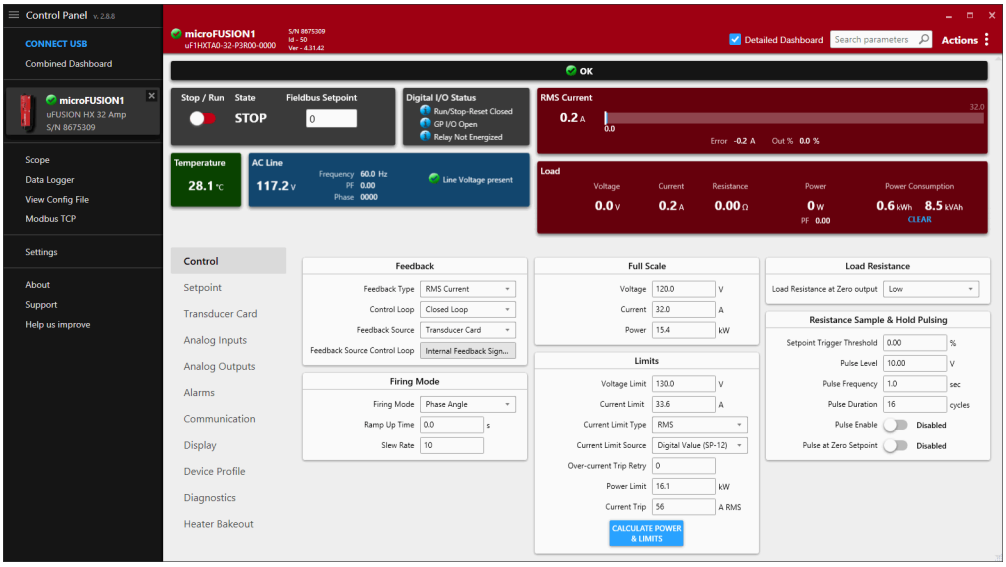

Monitor real-time data, control setpoints, digital run/stop, and dozens of other parameters using the Control Panel Software on a Windows PC.

Optionally, connect the Control Concepts Remote Display* to the DISPLAY port on the controller.

Use the Up and Down arrows to select parameters

Press the green check to enter edit mode

Use Plus and Minus to change the value

Press the green check again to save the new value

* Remote Display available as an addon or ordered separately

CONNECTORS

Tightening Torque - P1 & P2 Connectors		
# of Wires	Wire Size (AWG)	Torque
1	16 - 26	3.0 Inch lbs [0.34 Nm]
2	20	3.0 Inch lbs [0.34 Nm]

Tightening Torque - Line/Load Connectors	
Wire Size (AWG)	Torque
3 - 14	24 Inch lbs * [2.7 Nm]
Connectors on 8 to 240 amp units are not multi-conductor rated per UL. ***Only 1 conductor is allowed per terminal***	

** Accurate torque of the Line/Load connectors is critical for proper operation. Connector and wire damage can occur if improperly tightened.*

Torque to specification using a #2 Pozidriv bit.

Ensure Line/Load connectors are fully inserted and seated. Improper installation may cause connector overheating or controller damage.

P1 Command Connector

Example shows potentiometer inputs to setpoints 1 & 2 with run enabled wired to common.

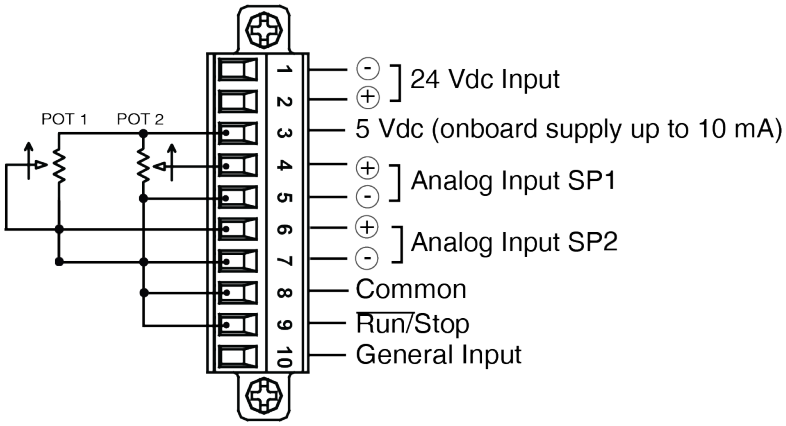

P2 Command Connector

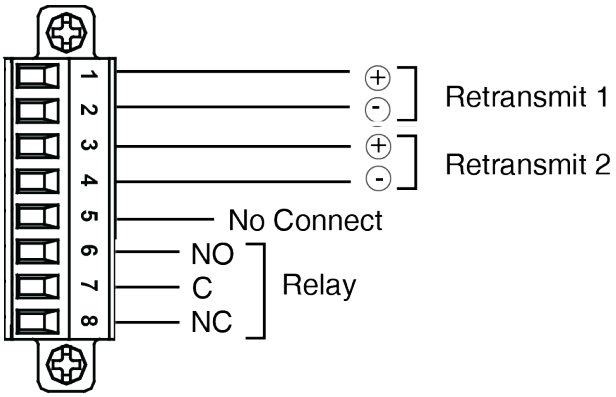

INDICATOR STATUS

24 Vdc	
Green	+24 Vdc OK
Red	+24 Vdc Wired Backwards

LINE OK	
Off	No AC Line Voltage
Green	AC Line OK, Locked
Orange	Controller Start/Boot
Red	AC Phase Lock/Loss

LIMIT	
Off	OK, No Limits
Orange	Voltage Limit
Red	Current Limit
Alternating Red/Orange	Power Limit

ALARM	
Off	No Alarms, Controller in "STOP" mode
Green	No Alarms, Controller in "RUN" mode
Orange	Warning Alarm Controller in "Run" mode
Red	Inhibit Alarm

OUTPUT	
Green	LEDs turn green in porportion to output.
Top LED Red	Controller at 100% output

TROUBLESHOOTING

If you purchased your controller from an OEM Supplier, contact the supplier for additional assistance in the event your question may call for information or components not available to our factory.

- Verify operation of the controller by referencing the LED indicators shown above.
- Inspect all wiring and connections. Ensure a steady 24Vdc power source is attached to the controller.
- Repeat the Operating Sequence steps outlined on the first page of this document.
- Connect with the MicroFUSION Control Panel software to view real-time data, faults, and alarms. The Control Panel Diagnostic tab provides additional fault and history information.
- If unable to connect with the Control Panel Software with a "*No Control Concepts devices are available*" message; re-check the USB cable connections.
  Common communication issues have been found to be caused by USB cables of varying quality. *

* Control Concepts recommends trying a different brand of USB cable if unable to connect with the Control Panel software. Contact our sales department to purchase USB cables validated to work with our MicroFUSION Power Controllers.

Sales and Technical Support is available Monday thru Friday 8:00 AM to 5:00 PM US Central Time
Contact us directly using Live Chat or email on our website at **www.ccipower.com**
or by calling 1-(800)-765-2799 or 1-(952)-345-6228

c UL us LISTED
CE EN60947-4
100kA SHORT CIRCUIT CURRENT RATING
FC Part 15 Subpart B Class A Device
RoHS COMPLIANT
Pb Pb-Free
PROUDLY DESIGNED & ASSEMBLED IN THE USA

 © Control Concepts Inc. 2021